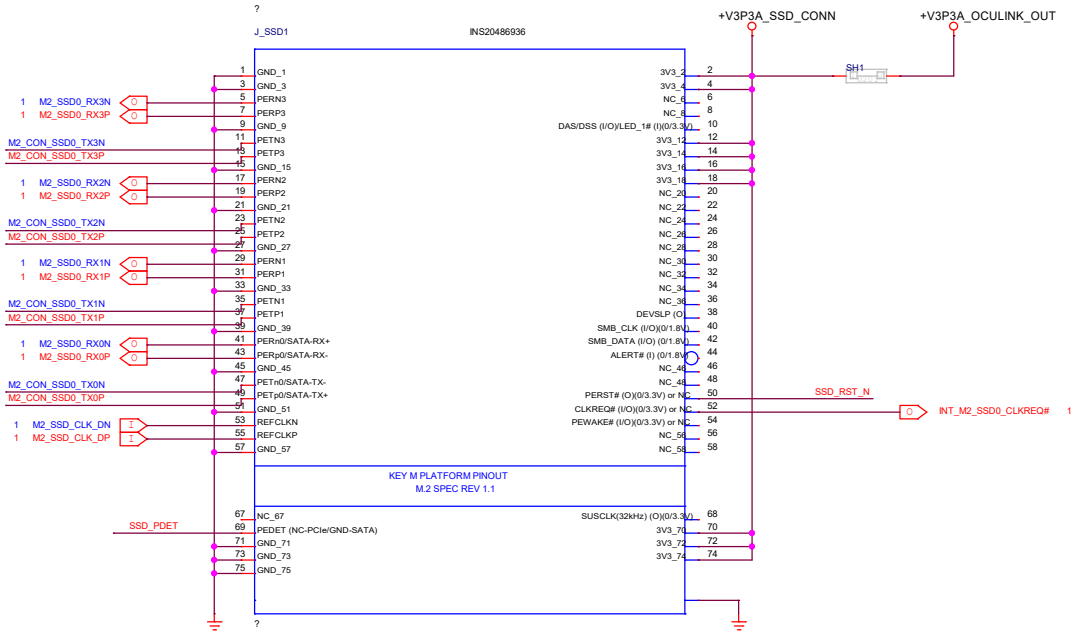

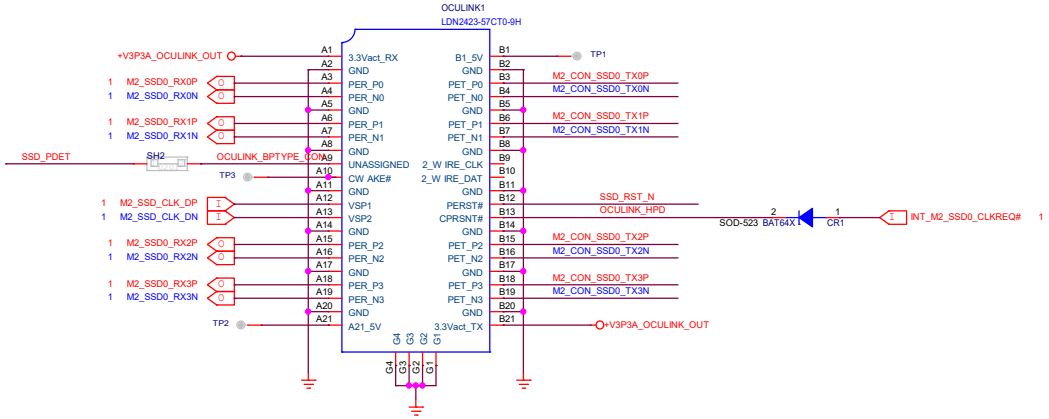

Size	Document Number	Rev
A3	SSD TO Oculink	V1.0
Date: Wednesday, June 07, 2023	Sheet 1 of 1	